Kingbright

Table of Contents

47 **INFRARED & PHOTOTRANSISTOR**

Infrared Emitting Diode

Phototransistor

Optoelectronic Components

2019-2021

INFRARED EMITTING DIODE

Part Number	Material	λP (nm)	Lens Type	Po (mW/sr) @20mA *50mA Min.	Po (mW/sr) @20mA *50mA Typ.	Viewing Angle 2θ1/2	Dimensions
KP-1608F3C	GaAs	940	water clear	0.8	2	150°	1.6mm x 0.8mm x 1.1mm (0603) 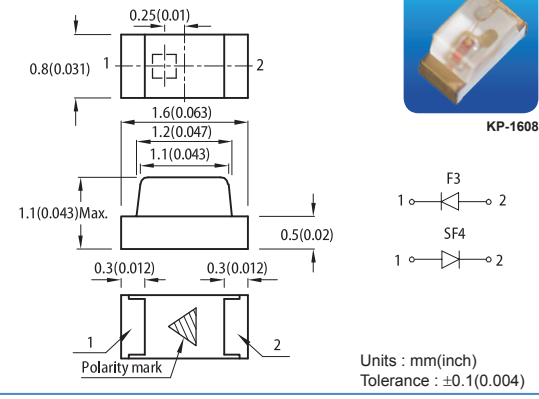
KP-1608SF4C	GaAlAs	880	water clear	0.8	1.5	150°	
KP-2012F3C	GaAs	940	water clear	0.8	2	160°	2.0mm x 1.25mm x 1.1mm (0805) 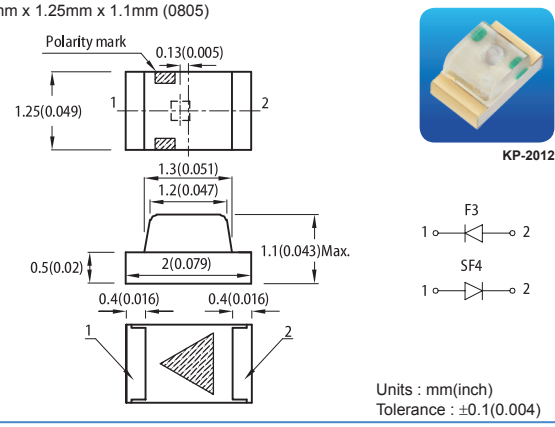
KP-2012SF4C	GaAlAs	880	water clear	0.8	1.5	160°	
KPA-3010F3C	GaAs	940	water clear	0.8	2	160°	3.0mm x 2.0mm x 1.0mm (1104 Right Angle) 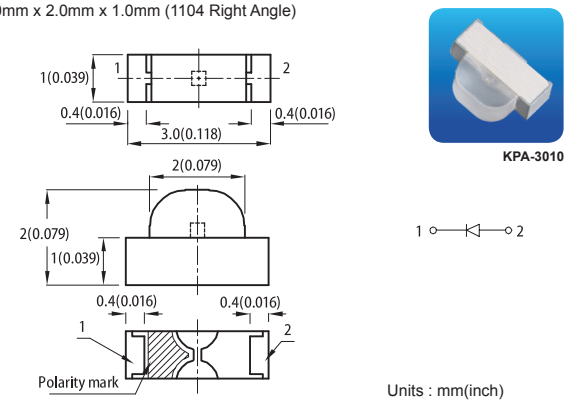
KM2520F3C03	GaAs	940	water clear	3	8	20°	2mm Subminiature IR Emitter 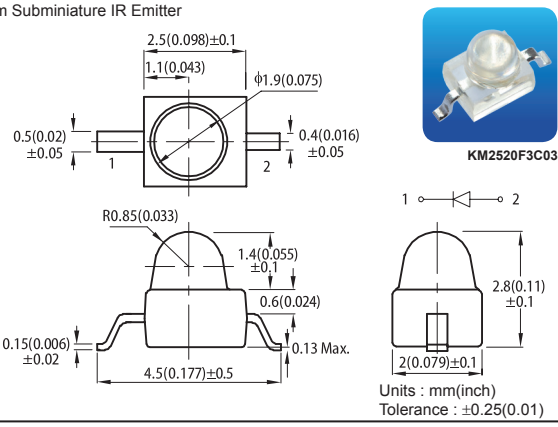
				*8	*16		

NOTE:
1. Radiant intensity value is traceable to CIE127-2007 standards.

INFRARED EMITTING DIODE

Part Number	Material	λP (nm)	Lens Type	Po (mW/sr) @20mA *50mA Min.	Po (mW/sr) @20mA *50mA Typ.	Viewing Angle 2θ1/2	Dimensions
L-34F3C	GaAs	940	water clear	3	8	50°	T-1 (3mm) Round L-34
				*8	*15	50°	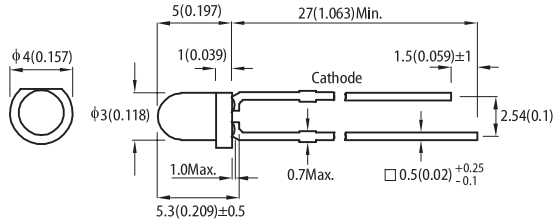
L-34SF4C	GaAlAs	880	water clear	3	16	50°	
				*5	*20	50°	Units : mm(inch) Tolerance : ±0.25(0.01)
L-7104F3C	GaAs	940	water clear	3	8	30°	T-1 (3mm) Round L-7104
				*12	*25	30°	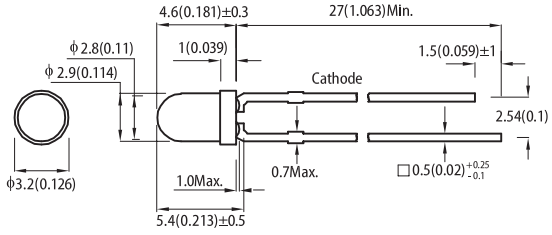
L-7104F3BT	GaAs	940	blue transparent	3	8	30°	
				*12	*25	30°	Units : mm(inch) Tolerance : ±0.25(0.01)
L-7113F3C	GaAs	940	water clear	8	20	20°	T-1 3/4 (5mm) Round L-7113
				*25	*50	20°	
L-7113F3BT	GaAs	940	blue transparent	8	20	20°	
				*25	*50	20°	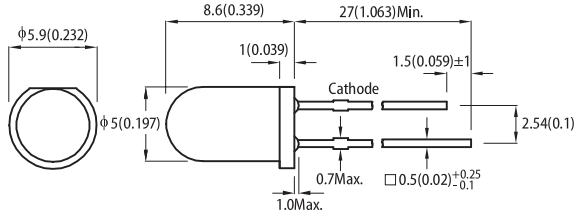
L-7113SF4C	GaAlAs	880	water clear	6	15	20°	
				*12	*25	20°	
L-7113SF6C	GaAlAs	860	water clear	18	40	20°	
				*55	*100	20°	
L-7113SF7C	GaAlAs	850	water clear	12	30	20°	
				*40	*90	20°	Units : mm(inch) Tolerance : ±0.25(0.01)

NOTE:
1. Radiant intensity value is traceable to CIE127-2007 standards.

PHOTOTRANSISTOR

Part Number	Lens Type
KP-1608P1C	water clear
KP-2012P3C	water clear
KP-3216P3C	water clear
KPA-3010P3C	water clear

Electrical And Radiant Characteristics T_A =25°C

Parameter	Symbol	Part Number	Min.	Typ.	Max.	Unit	Test Condition
Collector-to-Emitter Breakdown Voltage	$V_{BR\ CEO}$	-	30	-	-	V	I_C=100μA Ee=0mW/cm²
Emitter-to-Collector Breakdown Voltage	$V_{BR\ ECO}$	-	5	-	-	V	I_E=100μA Ee=0mW/cm²
Collector-to-Emitter Saturation Voltage	$V_{CE\ (SAT)}$	-	-	-	0.8	V	I_C=2mA Ee=20mW/cm²
Collector Dark Current	I_{CEO}	-	-	-	100	nA	V_{CE}=10V Ee=0mW/cm²
Rise Time (10% to 90%)	T_R	-	-	15	-	μs	V_{CE}=5V I_C=1mA R_L=1KΩ
Fall Time (90% to 10%)	T_F	-	-	15	-	μs	
On State Collector Current	$I_{(ON)}$	KP-1608P1C	0.1	0.3	-	mA	V_{CE}=5V, Ee=1mW/cm² λ=940nm
		KP-2012P3C	0.2	0.4			
		KP-3216P3C	0.2	0.4			
		KPA-3010P3C	0.2	0.4			

Absolute Maximum Rating T_A =25°C

Parameter	Maximum Ratings
Collector-to-Emitter Voltage	30V
Emitter-to-Collector Voltage	5V
Power Dissipation at (or below) 25°C Free Air Temperature	100mW
Operating Temperature Range	-40°C~ +85°C
Storage Temperature Range	-40°C~ +85°C

Dimensions

1.6mm x 0.8mm x 1.1mm (0603)

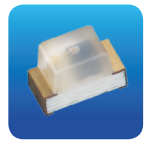

KP-1608

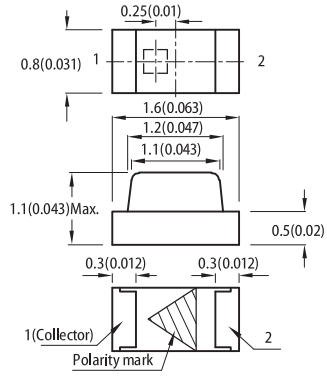

Units : mm(inch)
Tolerance : ±0.1(0.004)

2.0mm x 1.25mm x 1.1mm (0805)

KP-2012

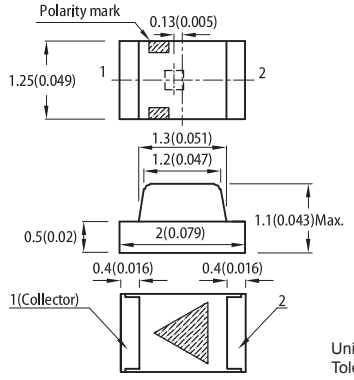

Units : mm(inch)
Tolerance : ±0.1(0.004)

3.2mm x 1.6mm x 1.1mm (1206)

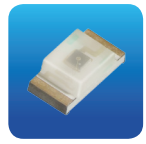

KP-3216

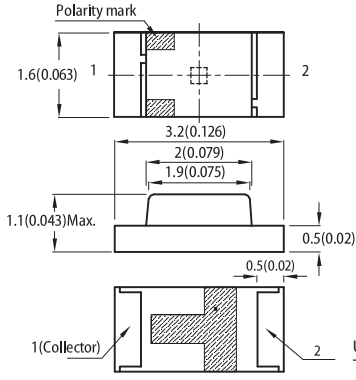

Units : mm(inch)
Tolerance : ±0.2(0.008)

3.0mm x 1.0mm x 2.0mm (1104)

KPA-3010

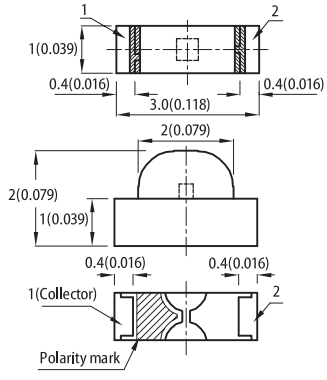

Units : mm(inch)
Tolerance : ±0.15(0.006)

PHOTOTRANSISTOR

Part Number	Lens Type
L-3DP3BT	blue transparent
L-7113P3C	water clear

Electrical And Radiant Characteristics T_A =25°C

Parameter	Symbol	Part Number	Min.	Typ.	Max.	Unit	Test Condition
Collector-to-Emitter Breakdown Voltage	$V_{BR\ CEO}$	-	30	-	-	V	I_C=100μA Ee=0mW/cm²
Emitter-to-Collector Breakdown Voltage	$V_{BR\ ECO}$	-	5	-	-	V	I_E=100μA Ee=0mW/cm²
Collector-to-Emitter Saturation Voltage	$V_{CE\ (SAT)}$	-	-	-	0.8	V	I_C=2mA Ee=20mW/cm²
Collector Dark Current	I_{CEO}	-	-	-	100	nA	V_{CE}=10V Ee=0mW/cm²
Rise Time (10% to 90%)	T_R	-	-	15	-	μs	V_{CE}=5V I_C=1mA R_L=1KΩ
Fall Time (90% to 10%)	T_F	-	-	15	-	μs	
On State Collector Current	$I_{(ON)}$	L-3DP3BT	0.1	0.2	-	mA	V_{CE}=5V, Ee=1mW/cm² λ=940nm
		L-7113P3C	0.5	2.5			

Absolute Maximum Rating T_A =25°C

Parameter	Maximum Ratings
Collector-to-Emitter Voltage	30V
Emitter-to-Collector Voltage	5V
Power Dissipation at (or below) 25°C Free Air Temperature	100mW
Operating Temperature Range	-40°C ~ +85°C
Storage Temperature Range	-40°C ~ +85°C
Lead Soldering Temperature (>5mm For 5sec)	260°C

Dimensions

T-1 (3mm) Phototransistor

L-3D

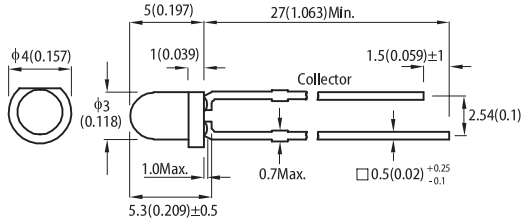

Units : mm(inch)
Tolerance : ±0.25(0.01)

T-1 3/4 (5mm) Phototransistor

L-7113

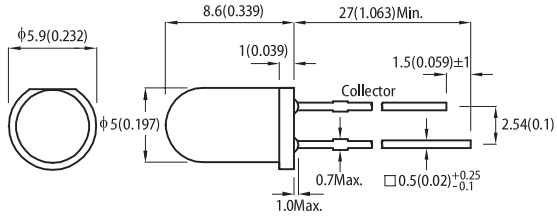

Units : mm(inch)
Tolerance : ±0.25(0.01)